Thin gate oxide CMOS DC-DC Buck converter with floating gate drivers

Joel Gak[3], Jorge Marin[1,2], Nicolas Gonzalez[3], Daniel Arevalos[1],Nicolas Calarco[3], Matias Miguez[3], Alfonso Cortes[1], Vicente Osorio[1], Mario Romero[1], Christian A. Rojas[1,2]
[1]Department of Electronic Eng., Universidad Tecnica Federico Santa Maria, Valparaiso, Chile,
[2]Advanced Center of Electrical and Electronics Engineering, Universidad Técnica Federico Santa María,
{jorge.marinn,christian.rojas}@usm.cl
[3]Engineering Department, Universidad Católica del Uruguay, Montevideo, Uruguay, {jgak,mmiguez}@ucu.edu.uy

***Abstract*—This document is a model and instructions for LaTeX. This work focuses on the design of a CMOS DC-DC buck converter targeting input voltages higher than the limited gate-source voltage common in thin oxide technology. This is enabled by driving the power device gates using fully integrated circuitry which allows floating voltages in the high-side device using bootstrapping. The gate driver has been fully characterized in simulation, showing low to high an high to low times below $12ns$. The bootstrapped level shifter has been integrated together with a dual-NMOS half bridge using the Skywater 130nm Opensource CMOS technology. Simulations show a peak efficiency of 91% at 38.2mA current load for a 10V to 3.3V DC-DC conversion, extending the input voltage range previously reported in this technology by 2X.**

***Index Terms*—Thin Oxide, CMOS, floating gate**

I. Introduction

DC-DC converters are an essential component of many modern electronic devices like, smartphones, laptops, and tablets. Their importance is increased when of the grid edge computing devices for Internet of thing applications are taken into account. In power management systems, DC-DC converters are used, switching from one DC voltage level to another, which is often necessary to power different components in a device or to match the voltage requirements of a load to the available power supply [1]. DC-DC converters can be implemented using a variety of technologies, but CMOS technology is becoming increasingly popular for this application. CMOS transistors have a number of advantages for DC-DC converters, such as high switching speed, low power consumption, ability to withstand high voltages (HV) in source and drain without complex extra process and high-density integration allowing high complex digital to be integrated beside HV circuits [2].

In Fig.1 a single leg NMOS DC-DC Buck converter is shown, transistors $M_{1,2}$ are used as power switches to transfer energy to inductance L_0 where the switching is performed by the drivers $D_{riv1}, -D_{riv2}$. In order to reduce as much as possible the r_{ON} of the transistor $M_{1,2}$, V_{GS} must be as high as possible without breaking (V_{MAX}). In case of transistor M_1 the ideal switching voltage will be just V_{MAX} but for M_2 the switching voltage will be $V_{MAX} + V_{S1}$, which could causes gate rupture in standard CMOS technologies due to thin gate oxide leading to transistor failure.

The authors would like to thanks ANII for the post doctoral funding of Nicolas Calarco project number PD_NAC_2021_1_168336. Supported by the Chilean research grant ANID/FONDECYT Regular/1210757 and by AC3E (ANID/BASAL/FB0008).

Even though in some technologies it is possible to fabricate CMOS transistors with thicker gate oxides, this is generally more expensive to fabricate and not generally available. This work addresses the challenge of using standard CMOS technology for DC-DC converters by using floating gate drivers. Floating gate drivers allow the gate of the high-side transistor to be switched relative to its source voltage, rather than relative to ground, as shown in Fig. 2, eliminating the need for a thick gate oxide on the high-side transistor [3].

This work is organized as follows: in section II the design of the floating gate driver is presented, followed by a discussion on DC-DC buck converter design application in section III. Section IV presents full system simulations of the proposed design and finally, in Section V presents the final conclusion.

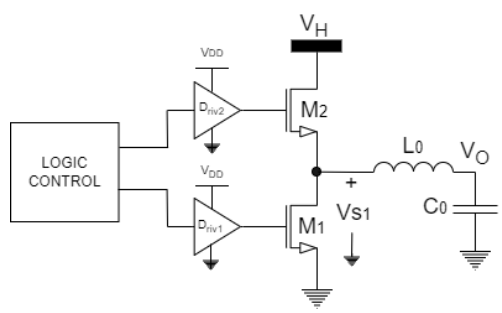

Fig. 1. Single leg NMOS DC-DC Buck converter. V_{MAX} is always less than V_{DD}.

II. Floating Gate Driver

In integrated CMOS synchronous buck converters, the high-side transistor has been historically built using a PMOS high-voltage device [4]. This eases the design effort by simplifying the driver structure and body biasing. However, using PMOS devices presents one implicit disadvantage that impacts the converter figures of merit; to achieve good efficiency the PMOS transistor must be wider than its NMOS counterpart. This in turn means that the power required by the transistor driver increases, reducing the performance of the system. If

2024 Argentine Conference on Electronics (CAE) | 979-8-3503-0508-1/24/$31.00 ©2024 IEEE | DOI: 10.1109/CAE59785.2024.10487162

Authorized licensed use limited to: Universidad Tecnica Federico Santa Maria. Downloaded on December 16,2024 at 01:52:42 UTC from IEEE Xplore. Restrictions apply.

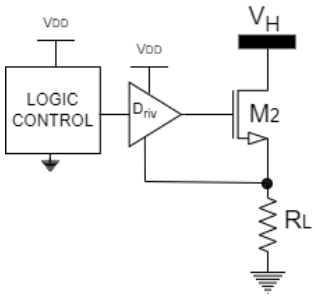

Fig. 2. Relative to source driving

a NMOS device is used, a reduced transistor size can be selected, and thus improve the overall efficiency and area. But this requires a special type of driver that can command it as a switch while protecting its thin oxide gate. These types of drivers provide floating gate operation with respect to the transistor source: when the switch is closed, the gate voltage rises above the source voltage by more than V_T and less than V_MAX. On the other hand, when the switch must be open, the gate voltage tracks the transistor source, effectively shutting down the device conduction. In Fig. 3 a schematic of the proposed driver, similar to [3], is presented.

To drive the power transistor M_{PWR} transistors $M_{1,2}$ form an inverter that is controlled by a floating latch L_1. Transistors $M_{1,2}$ must be carefully sized to comply with time requirements (generally M_{PWR} is a large transistor). Both the inverter and latch negative supply are referenced to the transistor source (V_{SOURCE}) and powered by V_{BOOT}. A bootstrap capacitor C_{BOOT}, maintains the voltage V_BOOT, storing the energy required for switching while tracking source voltage changes. The voltage difference $V_{BOOT} - V_{SOURCE}$ should be close to V_{MAX}, powering the latch and inverter. When the switch is closed, some of the charge stored in C_{BOOT} will be redistributed from the capacitor to the gate of the NMOS transistor M_{PWR}; which will reduce V_{BOOT}. To ensure that the voltage drop does not compromise its on-resistance and the latch operation, this reduction cannot be to high. In this work, the bootstrap capacitor was selected 10 times larger than the estimated gate source capacitance (C_{GS}) of M_{PWR}.

The nature of the buck converter switching node provides a refresh path for the boot capacitor charge, ensuring proper operation. This happens when the low-side is active, and one of the capacitor plates is grounded, making it possible to draw current from the low-voltage source. Charge is blocked back when the capacitor is just connected by a diode (D_1).

Operating the latch requires a high voltage level shifter (LEVEL SHIFTING on Fig. 3), to translate signals from the low to high voltage domain (SHORT PULSE GENERATOR on Fig. 3) without breaking the floating transistors' maximum V_{GS} rating. The main idea is to drive the latch set and reset signals from V_H to $V_H - V_{latch}$, using pulsed inputs and an relatively large bias current I_{Bias} to drive the set and reset nodes. Positive feedback ensures that the idle signal is quickly set to a state that won't affect the latch operation.

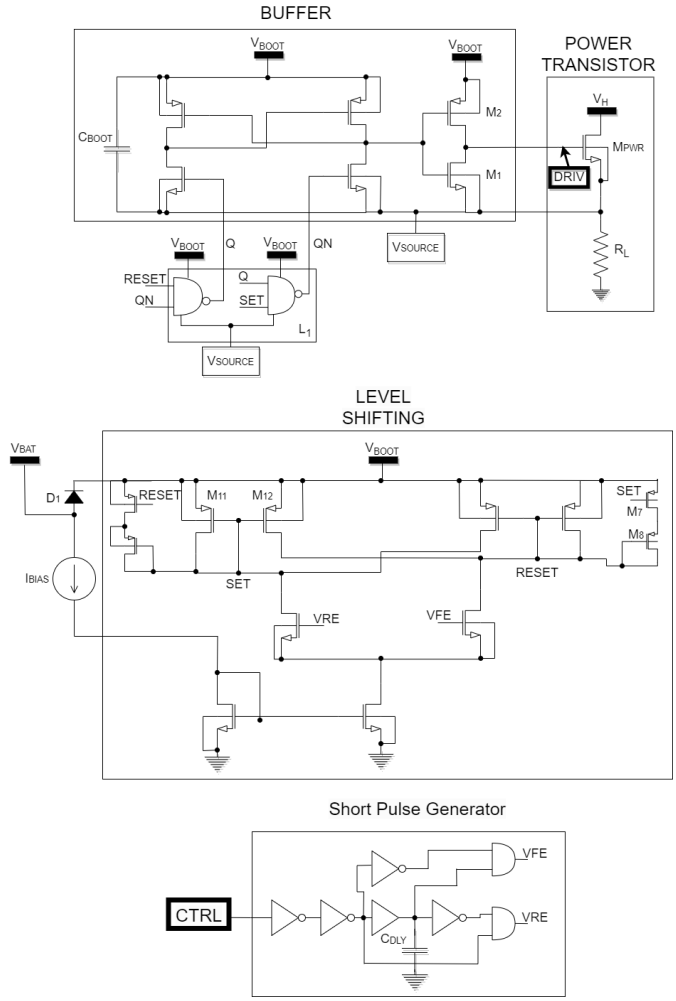

Fig. 3. Floating Gate Diver Schematic

For a Set (turn-on) operation, V_{RE} node is pulsed high, and I_{Bias} starts to flow through that branch. First discharging SET parasitic capacitance. As SET drops, M_{11} starts conducting a fraction of I_{Bias} which is then mirrored by M_{12} into the RESET node. As RESET is now in a high impedance floating node, the current charges the node until it reaches the bootstrap voltage V_H. This in turn fully disengages the latch $RESET$ signal. M_{11} must be a transistor long enough so that its V_{DS} drop while conducting I_{Bias} is enough to trigger the latch and must be dimensioned accordingly. Transistors M_{11}/M_{12} multiplication factor depends on technology, parasitic and the latch parameters, which should be derived through design space exploration.

V_{RE} pulse should be long enough for I_{Bias} to discharge the SET node, but not too large so that M_{11} wastes the capacitor charge to ground when the latch has already tripped. Trimming I_{Bias} or the pulse width can be used to improve efficiency in operation speed and switch on resistance.

Transistors $M_{7,8}$ are implemented to account for large slewing in the high voltage node while the opposite branch is operated. In case of a large slew rate, the floating node could

Authorized licensed use limited to: Universidad Tecnica Federico Santa Maria. Downloaded on December 16,2024 at 01:52:42 UTC from IEEE Xplore. Restrictions apply.

lag behind, which can compromise the transistors or glitch the latch activation. When SET is active M_7 also is, leaving M_8 as a diode-connected transistor to charge the $RESET$ node to V_{HIGH} even when there is no current flowing through M_{12}.

In Fig. 4 a transient simulation of the designed floating gate driver, for a $V_{BAT} = 5V$, a short pulse generation power supply of $1.8V$, $V_H = 10V$ and switching frequency of $10MHz$. It can be seen that floating gate driver works as expected, the $DRIV$ signal follows V_{SOURCE} when $CTRL$ is low and it goes one $V_{BOOT} = V_{BAT} - V_{D1}$ above V_{SOURCE} when $CTRL$ is on high state, the low to high an high to low times are below $12ns$.

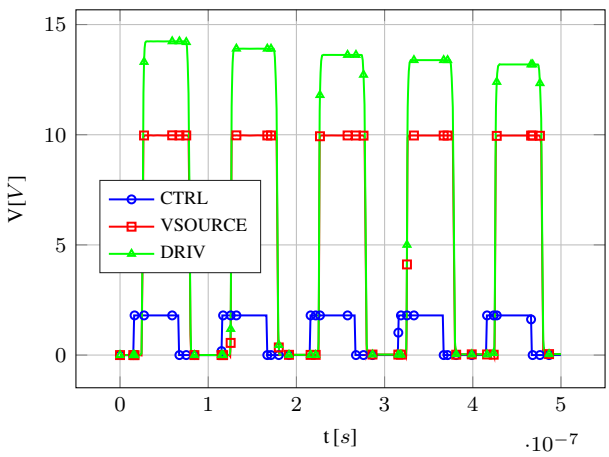

Fig. 4. Transient simulation of the designed floating gate driver.

The layout of the floating-gate driver is shown in Fig. 5. Total area is $2489\mu m^2$

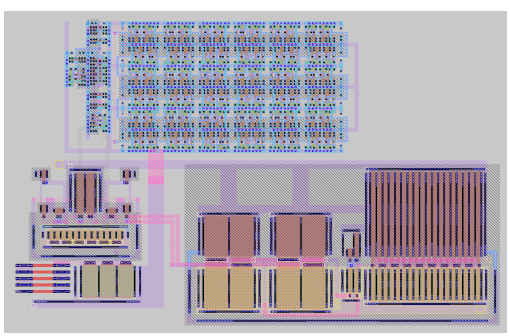

Fig. 5. Bootstrapped level shifter full layout.

III. DC-DC Buck converter

In Fig.6, the NMOS single leg DC-DC buck converter standard topology used in this work is shown. It is used to perform the a down conversion from an input voltage ($V_H = 10V$) to a low output voltage ($V_{OUT} = 3.3V$). The circuit consists of two power NMOS transistors $M_{1,2}$ and two different gate drivers where D_{riv1} is a standard level shifter design using the methodology presented in [5] and $Driv2$ a floating gate driver like the the one designed in the prior section, with ($V_{MID} = 5V$), and a control logic designed with standard cells ($V_{DD} = 1.8V$) and a LC output filter L_O and C_O.

In order to design the DC-DC several things must be taken into account: the power source voltage V_H, output voltage V_{OUT}, load current (in this case $I_{LOAD} = 75mA$) and switching frequency f_{sw} in order to determine over all efficiency. The static and dynamic power losses given by (1) and (2), were P_S and P_D are the static (conduction) and dynamic (switching) power losses, respectively, and $R_{ONM_{1,2}}$ are the on state resistance of power transistors $M_{1,2}$, respectively [6]. Equations (1) and (2) assumes 50% duty cycle and no dead time losses.

$$P_S = (R_{ONM_1} + R_{ONM_2}) \cdot I_{LOAD} \quad (1)$$

$$P_D = (C_{GGM_1} + C_{GGM_2}) \cdot V_{OUT}^2 \cdot f_{SW} \quad (2)$$

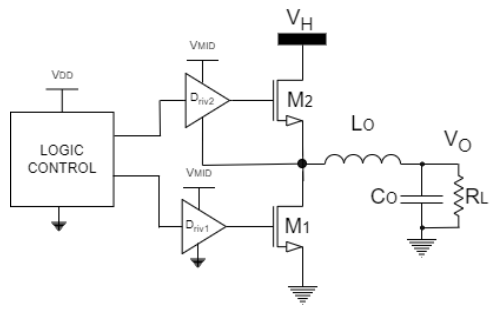

Fig. 6. The DC-DC Buck converter proposed on this work.

Layout generation can be an very time consuming task done by a highly trained individual; in order to reduce it, an automated layout generator flow which includes the prior defined specifications, and that uses standard and special transistors, border and corner cells, and guard rings was developed and used. The layout of the DC-DC Buck converter is shown in Fig. 7, yielding a total silicon area of $0.27mm^2$, including the guard ring structures. In Table I, a summary of the dimensions of the different subsystems is presented.

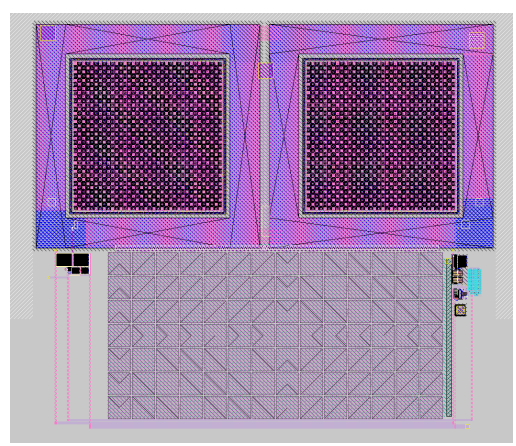

Fig. 7. Generated DC-DC Buck converter layout.

Authorized licensed use limited to: Universidad Tecnica Federico Santa Maria. Downloaded on December 16,2024 at 01:52:42 UTC from IEEE Xplore. Restrictions apply.

IV. Full system simulations

All the circuits in this work have been designed, implemented and simulated using the open-source PDK Skywater 130nm CMOS technology with open-source analog design tools. In this section, the main simulated results are shown and analyzed. To test the performance of the DC-DC architecture, the efficiency has been simulated for different load current values at a switching frequency of $f_{SW} = 100kHz$, as shown in Fig. 8 as efficiency curve with (EFF_{LS}) and without (EFF_{NOLS}) the floating gate driver. For the simulations, the input voltage $V_H = 10V$ and output $V_{OUT} = 3.3V$, while the switching pulses were provided in an open-loop fashion, after being derived from system-level simulations. The peak efficiency is 91% at $I_{LOAD} = 38.2mA$.

The transient simulation is shown in Fig. 9 and 10, showing a good startup behaviour and a ripple below 15mV, respectively.

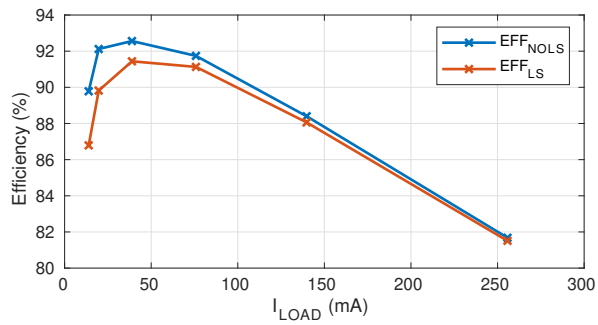

Fig. 8. DC-DC Buck converter simulated efficiency for different load current, with (EFF_{LS}) and without (EFF_{NOLS}) the floating gate driver for $f_{SW} = 100kHz$.

TABLE I
Subsystems Dimensions

Subsytem	Width[μm]×Length[μm]	Area[μm^2]
Power Stage	616x306	188496
Boot Capacitor	447×223	100
Boot Diode	17×17	289
Driver	100×21	2100

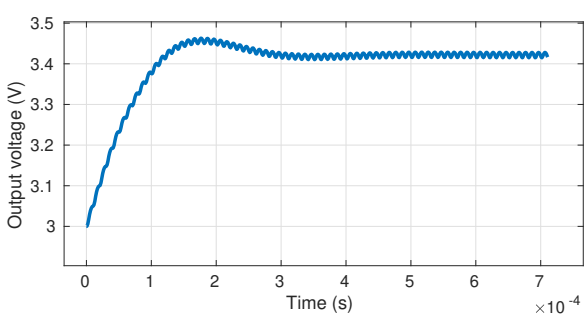

Fig. 9. DC-DC Buck converter simulated start-up transient simulation for load current equal to 75mA and $f_{SW} = 100kHz$.

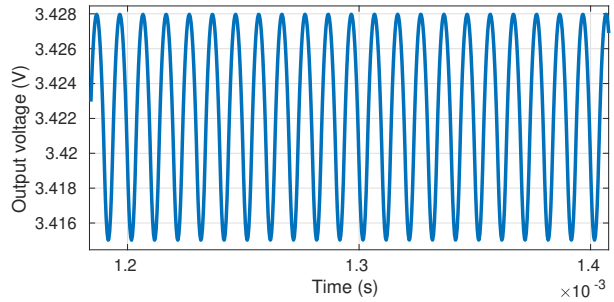

Fig. 10. DC-DC Buck converter steady state simulation for load current equal to 75mA and $f_{SW} = 100kHz$, showing the ripple value which is below 15mV.

V. Conclusions

In this paper, the design, simulation and the automated layout, in Skywater 130nm CMOS technology, of a thin gate oxide CMOS DC-DC Buck converter with floating gate drivers was presented. The gate driver has been simulated for the required working conditions, showing low to high an high to low times below 12ns. The bootstrapped level shifter has been integrated together with a dual-NMOS half bridge showing a peak efficiency of 91% at 38.2mA current load for a 10V to 3.3V DC-DC conversion, extending the input voltage range previously reported in this technology [7] by factor of two.

References

[1] C. Fuentes, B. Allongue, S. Buso, G. Blanchot, F. Faccio, S. Michelis, S. Orlandi, and G. Spiazzi, "Power distribution with custom dc-dc converters for slhc trackers," in *2009 IEEE Nuclear Science Symposium Conference Record (NSS/MIC)*, 2009, pp. 1300–1305.

[2] R. Garcia-Ramirez, A. Chacon-Rodriguez, R. Molina-Robles, R. Castro-Gonzalez, E. Solera-Bolanos, G. Madrigal-Boza, M. Oviedo-Hernandez, D. Salazar-Sibaja, D. Sanchez-Jimenez, M. Fonseca-Rodriguez, J. Arrieta-Solorzano, R. Rimolo-Donadio, A. Arnaud, M. Miguez, and J. Gak, "Siwa: A custom risc-v based system on chip (soc) for low power medical applications," *Microelectronics Journal*, vol. 98, p. 104753, 2020.

[3] Z. Liu, L. Cong, and H. Lee, "Design of on-chip gate drivers with power-efficient high-speed level shifting and dynamic timing control for high-voltage synchronous switching power converters," *IEEE Journal of Solid-State Circuits*, vol. 50, no. 6, pp. 1463–1477, 2015.

[4] G. A. Rincón-Mora, *Switched Inductor Power IC Design*. Springer, 2023.

[5] J. Gak, M. Miguez, and A. Arnaud, "Cmos level shifters from 0 to 18 V output," *Analog Integr. Circuits Signal Process.*, vol. 107, no. 3, p. 617–628, jun 2021.

[6] G. V. Piqué and E. Alarcón, *CMOS Integrated Switching Power Converters: A Structured Design Approach*. Springer Science & Business Media, 2011.

[7] J. Marin, J. Gak, A. Cortes, N. Calarco, A. Oliva, E. Lindstrom, M. Miguez, A. Falcón, N. Osterman, and C. A. Rojas, "Integrated three-level flying capacitor dc-dc buck converter for cubesat applications," in *2023 Argentine Conference on Electronics (CAE)*, 2023, pp. 90–95.

Authorized licensed use limited to: Universidad Tecnica Federico Santa Maria. Downloaded on December 16,2024 at 01:52:42 UTC from IEEE Xplore. Restrictions apply.